COMMERCIAL
MODELS: XTHERM 1005 THROUGH 2005

CATALOG NO. 9300.742
Effective: 08-05-10
Replaces: 09-29-09

RAYPAK ILLUSTRATED PARTS LIST

MODEL SIZES: 1005, 1505 & 2005

MODEL TYPES: MODULATING VERTICAL BOILER H, WH, & WHP CAT IV

DATES OF MANUFACTURE: 09-01-08 THROUGH CURRENT

THE PARTS LISTED ARE FOR STANDARD EQUIPMENT FOR THIS MODEL TYPE. RAYPAK RESERVES THE RIGHT TO SUBSTITUTE, DELETE OR CHANGE ANY PART WITHOUT NOTIFICATION. THE ADDITION OF OPTIONS MAY ALSO CHANGE SOME OF THE PARTS. ORDER REPLACEMENT PARTS FROM ACTUAL HEATER COMPONENTS.

FOR DETAILED INSTRUCTIONS, SEE "HOW TO USE YOUR RAYPAK ILLUSTRATED PARTS LIST", CATALOG NO. 9001.10

Raypak, Inc., 2151 Eastman Avenue, Oxnard, CA 93030
(805) 278-5300 FAX (805) 278-5489
Litho In U.S.A.
P/N 241345

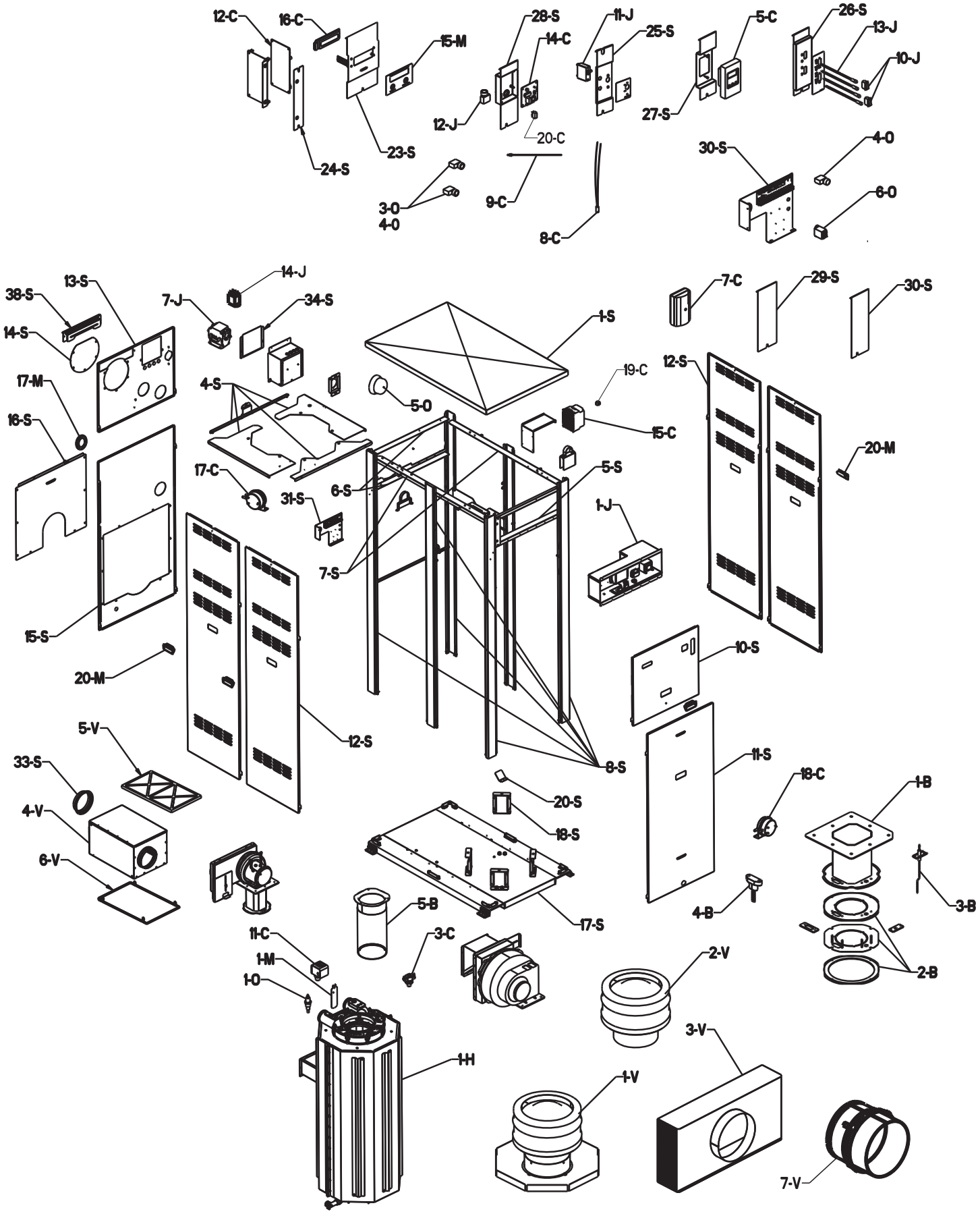
12-C
16-C
15-M
28-S
14-C
11-J
25-S
5-C
26-S
13-J
10-J
12-J
20-C
27-S
23-S
24-S
3-O
4-O
9-C
8-C
30-S
4-O
6-O
38-S
13-S
14-J
7-J
34-S
14-S
1-S
7-C
29-S
30-S
17-M
4-S
5-O
19-C
12-S
16-S
15-C
20-M
17-C
6-S
5-S
31-S
1-J
7-S
15-S
10-S
20-M
12-S
5-V
11-S
33-S
18-C
1-B
20-S
4-V
18-S
6-V
4-B
3-B
5-B
17-S
11-C
3-C
2-V
1-M
2-B
1-O
3-V
1-H
1-V
7-V

HEAT EXCHANGER DETAIL

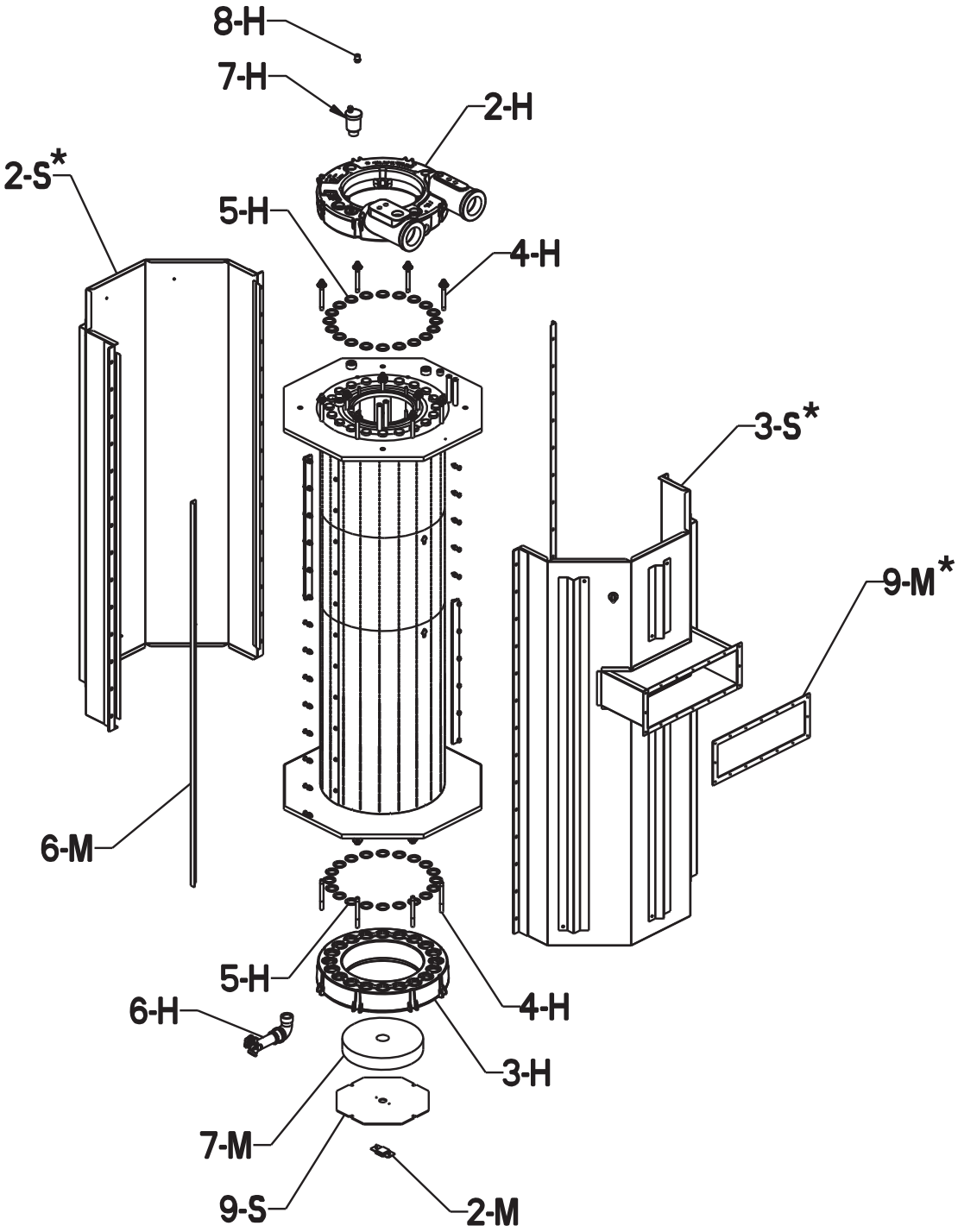

*SURFACES REQUIRE HIGH-TEMPERATURE RTV SEALANT (ITEM 5-M). FOLLOW MANUFACTURER'S INSTRUCTIONS.

J-BOX DETAIL

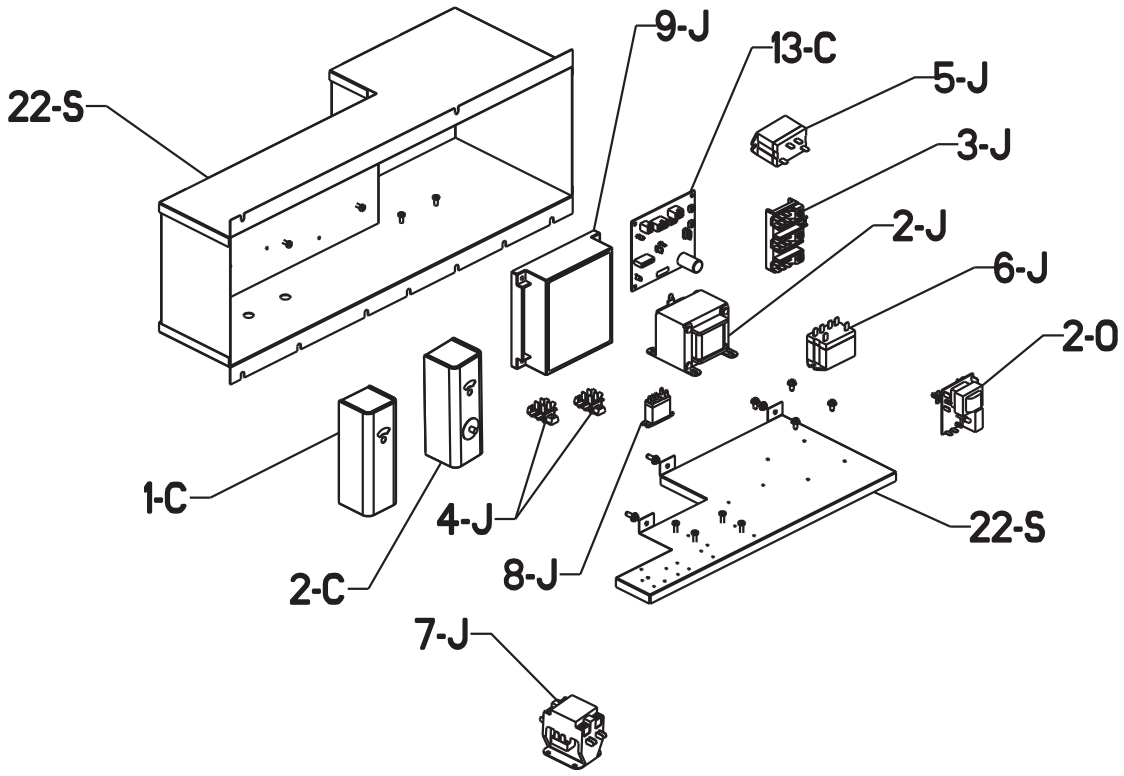

GAS TRAIN DETAIL

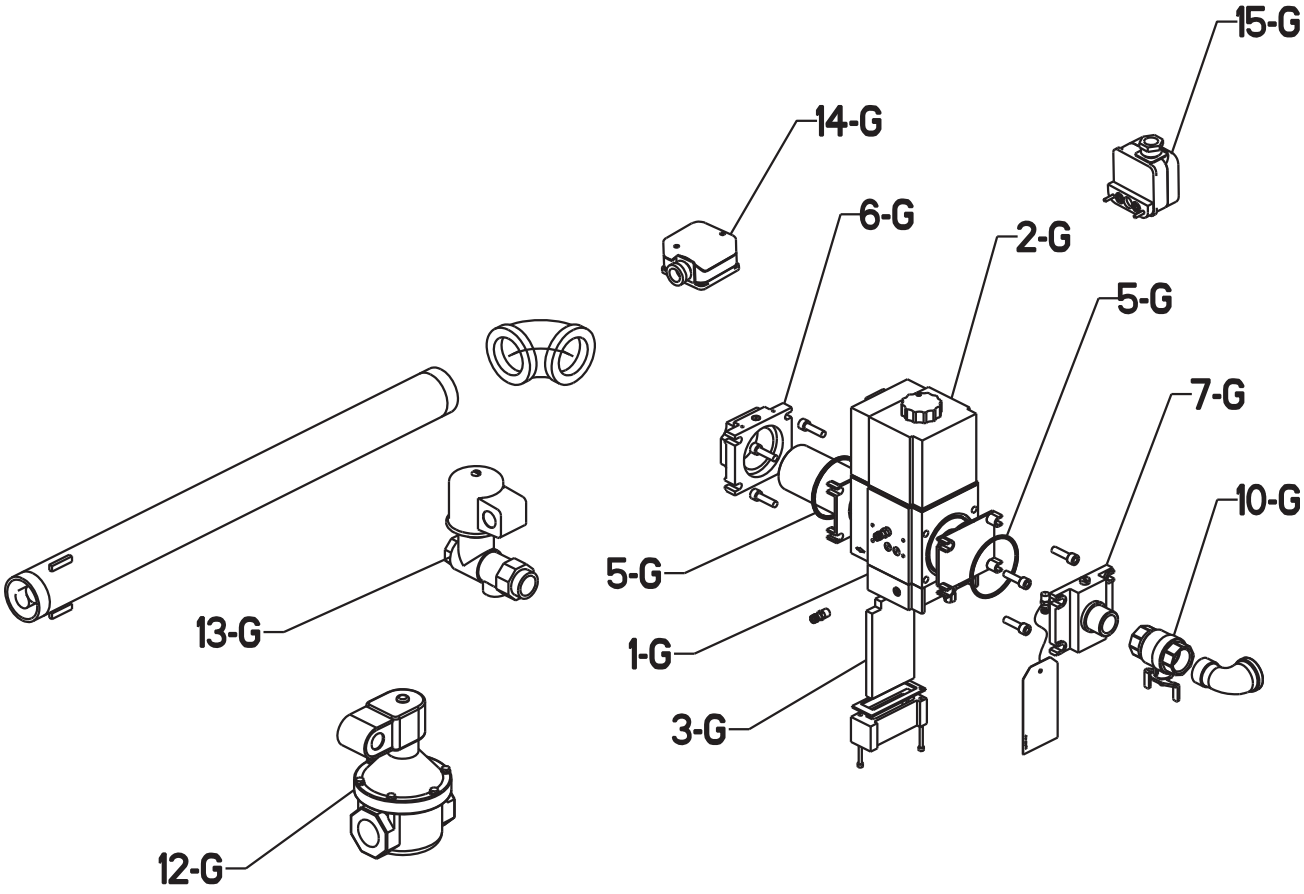

BLOWER DETAIL

MODELS 1005 & 1505

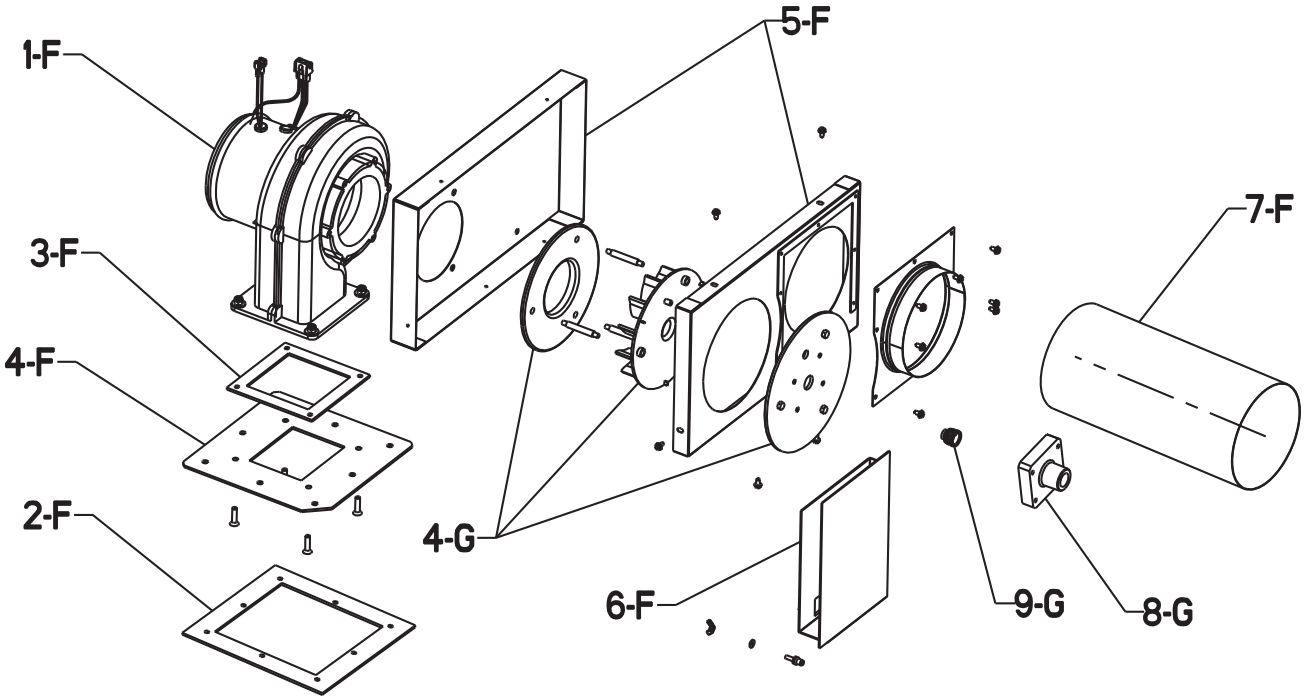

MODEL 2005

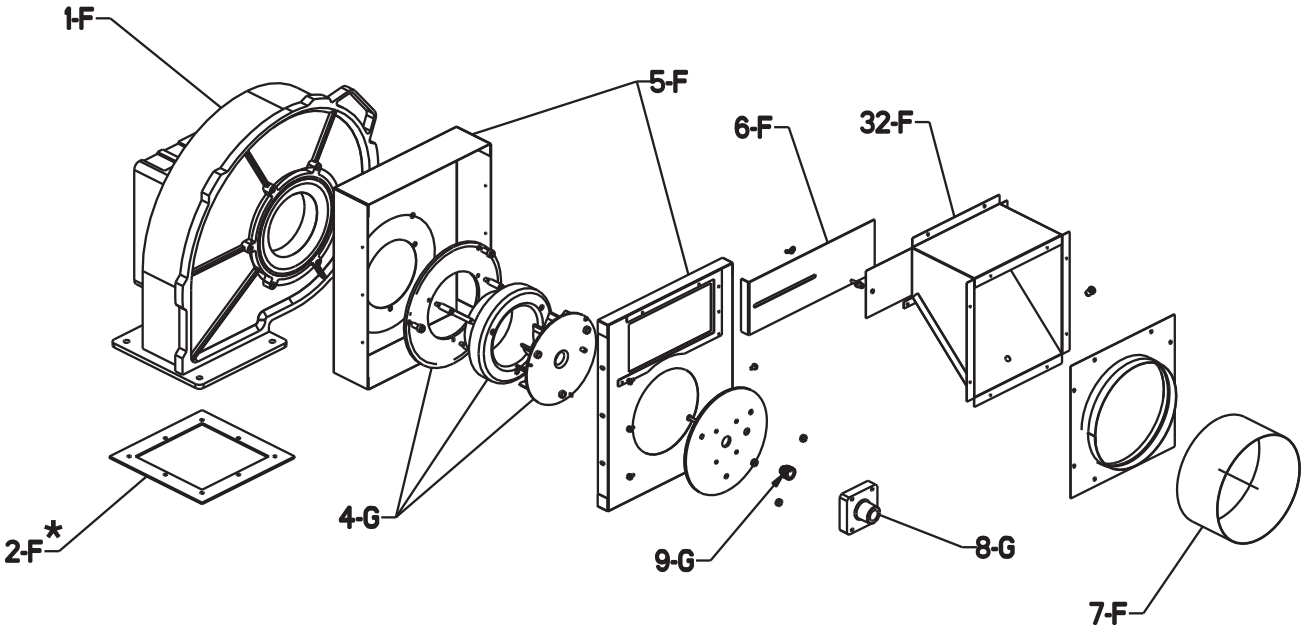

*SURFACES REQUIRE HIGH-TEMPERATURE RTV SEALANT (ITEM 5-M). FOLLOW MANUFACTURER'S INSTRUCTIONS.

BYPASS DETAIL

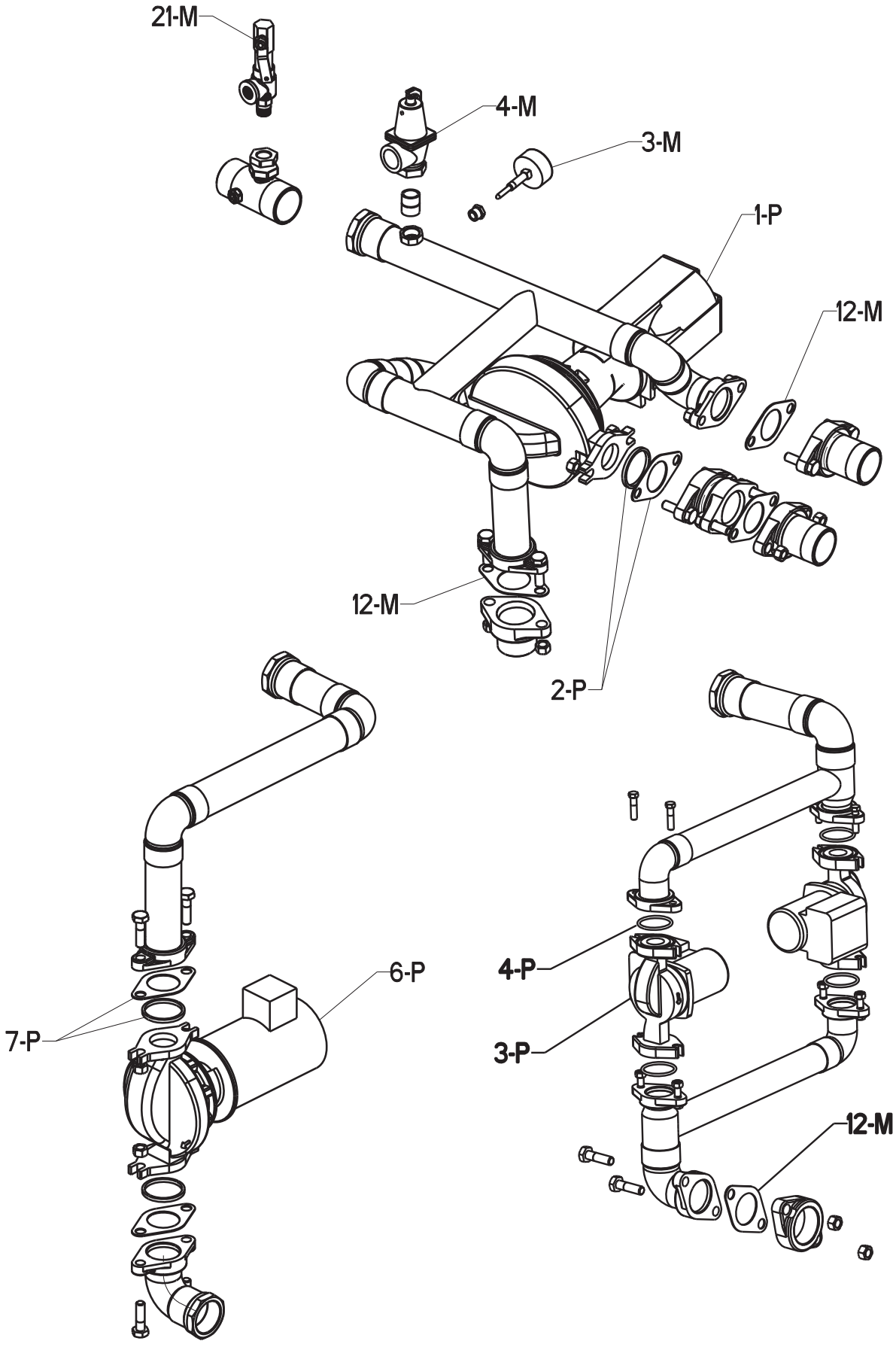

SECONDARY HEAT EXCHANGER DETAIL

CAUTION
39-S PVC VENT ADAPTER AVAILABLE FOR REPAIR ONLY. NOT AVAILABLE FOR FIELD CONVERSION.

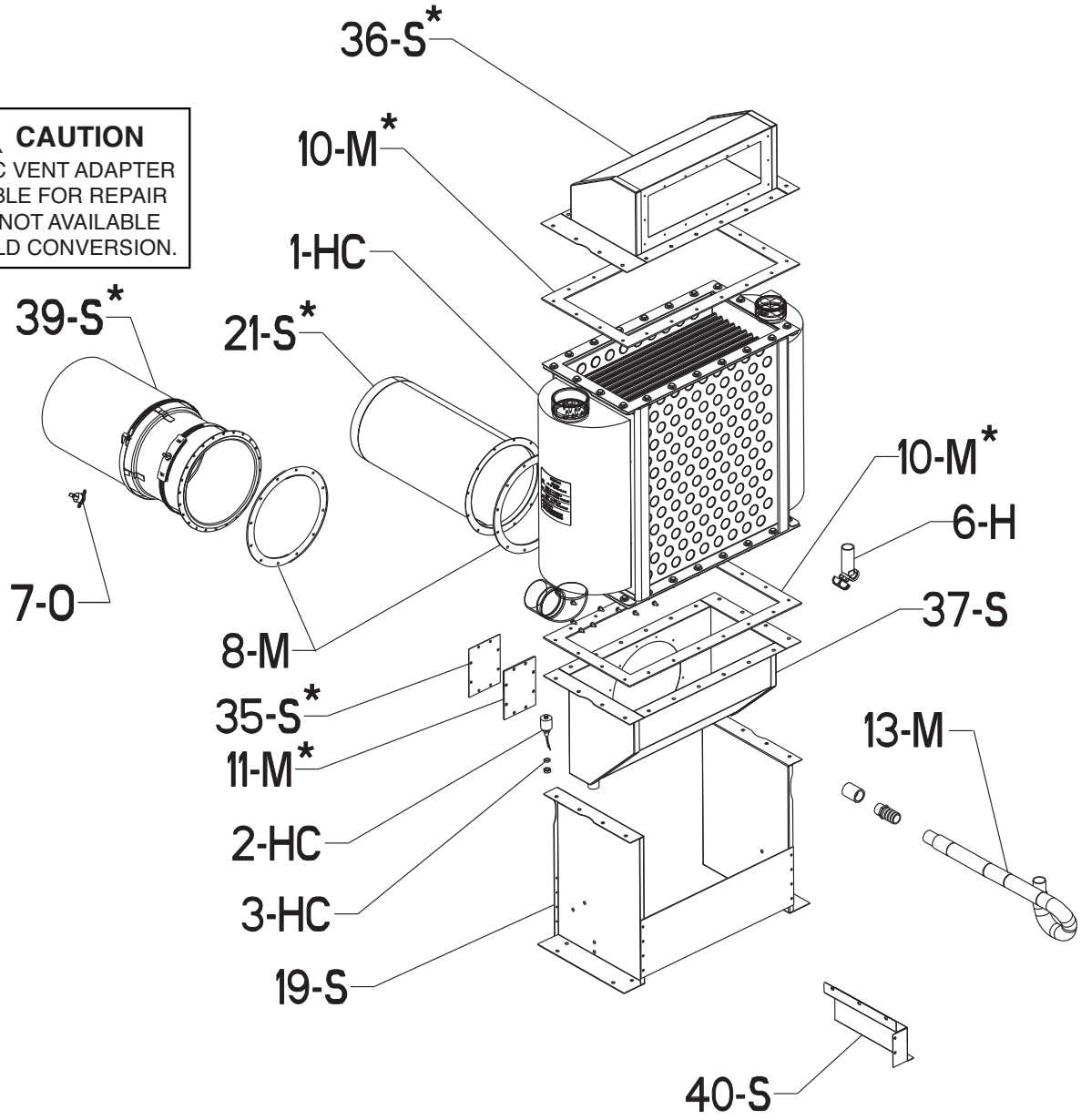

*SURFACES REQUIRE HIGH-TEMPERATURE RTV SEALANT (ITEM 5-M). FOLLOW MANUFACTURER'S INSTRUCTIONS.

CALL OUT	DESCRIPTION	1005	1505	2005
B	**BURNER ASSEMBLY**			
1-B	Adapter Assembly	011749F	011749F	011750F
2-B	Adapter Gaskets and Heat Sheild	011751F	011751F	011751F
3-B	Flame Sensor Probe	011752F	011752F	011752F
4-B	Igniter	007400F	007400F	007400F
5-B	Burner	011754F	011755F	011756F
C	**CONTROLS**			
1-C	Auto Reset Adjustible High Limit 240F Max	011860F	011860F	011860F
	Auto Reset Adjustible High Limit 180F Max	006445F	006445F	006445F
	Auto Reset Adjustible High Limit 200F Max	012546F	012546F	012546F
2-C	Manual Reset Adjustible High Limit 240F	007144F	007144F	007144F
	Manual Reset Adjustible High Limit 200F	008081F	008081F	008081F
3-C	Manual Reset Fixed High Limit 240F	008520F	008520F	008520F
	Manual Reset Fixed High Limit 200F	008093F	008093F	008093F
4-C	Remote Aquastat (Tankstat) 2-Stage B-3 (Not Shown)	007392F	007392F	007392F
5-C	Controller Modulating (Tekmar) H7 & WH7	012407F	012407F	012407F
	Controller On/Off (Tekmar) WHP	012253F	012253F	012253F
6-C	Controller 4-Stage B-21 / B-23 Digital Optional (Not Shown)	009862F	009862F	009862F
	Controller 2-Stage B-26 / B-27 Digital Optional (Not Shown)	009861F	009861F	009861F
7-C	Sensor Outdoor Air B-23 / B-27	010786F	010786F	010786F
8-C	Sensor Water B-21 thru B-27	010787F	010787F	010787F
9-C	Sensor Water screw-In (Tekmar)	011861F	011861F	011861F
11-C	Flow Switch	007142F	007142F	007142F
12-C	Printed Circuit Board UDB (Diagnostic)	012571F	012571F	012571F
13-C	Printed Circuit Board UGB (Blower)	N/A	N/A	011759F
14-C	Printed Circuit Board CWR	011717F	011717F	011717F
20-C	Relay DPDT 24VDC	005962F	005962F	005962F
15-C	CWR Control (Inverter)	012661F	012661F	012661F
19-C	Chip - Inverter Prog	013069F	013069F	013069F
16-C	Diagnostic Display	012662F	012662F	012662F
17-C	Air Vent Pressure Switch	011760F	011760F	011760F
18-C	Air Intake Pressure Switch	011761F	011761F	011761F
J	**CONTROL BOX**			
1-J	Control Box Complete	N/A	N/A	N/A
2-J	Transformer 120/24 100 VA	007373F	007373F	N/A
	Transformer 120/24 150 VA	N/A	N/A	011762F
3-J	Terminal Block w / Ground Lug	008523F	008523F	008523F
4-J	Terminal Block 2 Space	011763F	011763F	011763F
5-J	Blower Relay 120 VAC	008977F	008977F	N/A
6-J	Pump Relay 24 VAC	007925F	007925F	007925F
7-J	Pump Contactor 120 VAC	007906F	007906F	007906F
14-J	Relay DPDT 24VAC	013243F	013243F	013243F
8-J	Relay SPDT 24 VAC (Alarm)	009039F	009039F	009039F
	Relay SPDT 24 VAC (Enable/Disable)	009039F	009039F	009039F
	Relay SPDT 24 VAC (Remote Status)	009039F	009039F	009039F
9-J	Ignition Control HSI Single Try	009057F	009057F	009057F
	Ignition Control HSI Three Try	007374F	007374F	007374F
10-J	Rocker Switch (Burner / Pump)	006872F	006872F	006872F
11-J	On / Off Shut Down Switch	007380F	007380F	007380F
12-J	Reset Switch (CWR)	005641F	005641F	005641F
13-J	Indicator Lamp	011848F	011848F	011848F
F	**FAN**			
1-F	Blower Combustion Air	012444F	012446F	011765F
2-F	Adapter Gasket	011885F	011885F	011885F
3-F	Adapter Gasket	011886F	011886F	N/A
4-F	Adapter Plate	011887F	011887F	N/A
5-F	Plenum Assembly	011863F	011863F	011864F
6-F	Air Shutter	011875F	011875F	011876F
7-F	Hose Duct 6"	007420F	007420F	N/A
	Hose Duct 8"	N/A	N/A	012680F

CALL OUT	DESCRIPTION	1005	1505	2005
G	**GAS TRAIN**			
1-G	Valve Gas Modulating (Dungs) Natural Gas	011766F	011766F	011768F
	Valve Gas Modulating (Dungs) Propane Gas	011766F	011766F	011766F
2-G	Valve Coil Nat	012310F	012310F	012311F
	Valve Coil Pro	012310F	012310F	012310F
3-G	Inlet Gas Filter	012294F	012294F	012295F
4-G	Swirler	011888F	011888F	011889F
5-G	O Rings (Includes Gas Valve and Adapter O Rings)	012440F	012440F	012441F
6-G	Adapter Gas Valve 1" Inlet (Includes O Rings)	011915F	011915F	011915F
	Adapter Gas Valve 1-1/4" Inlet (Includes O Rings)	011916F	011916F	N/A
	Adapter Gas Valve 2" Inlet (Includes O Rings)	N/A	N/A	011917F
7-G	Adapter Gas Valve Outlet (Includes Venturi & O Ring)	012545F	012545F	012297F
8-G	Adapter Swirl Plate	012298F	012298F	012298F
9-G	Nozzle Natural Gas	012301F	012303F	012305F
	Nozzle Propane Gas	012308F	012308F	012301F
10-G	Valve Gas Ball (WOG)	011769F	011769F	011769F
11-G	Motorized Safety Shut Off Valve (Optional Not Shown)	011908F	011908F	011908F
12-G	Solenoid Safety Shut Off Valve Nat (Optional)	011910F	011910F	011911F
	Solenoid Safety Shut Off Valve Pro (Optional)	011909F	011909F	011909F
13-G	Vent Valve Gas Nat (Optional)	011914F	011914F	011914F
	Vent Valve Gas Pro (Optional)	011913F	011913F	011913F
14-G	Switch Low Gas Pressure (Optional)	011770F	011770F	011770F
15-G	Switch High Gas Pressure (Optional)	011771F	011771F	011771F
H	**HEAT EXCHANGER (Primary)**			
1-H	Heat Transfer Cupro-Nickle Bronze (Includes 18-S)	012574F	012575F	012576F
	Heat Transfer Cupro-Nickel Cast Iron (Includes 18-S)	012577F	012578F	012579F
	Heat Transfer Copper Bronze (Includes 18-S)	012580F	012581F	012582F
	Heat Transfer Copper Cast Iron (Includes 18-S)	012583F	012584F	012585F
2-H	Inlet/Outlet Header Bronze	009103F	009103F	009103F
	Inlet/Outlet Header Cast Iron	012332F	012332F	012332F
3-H	Return Header Bronze	007204F	007204F	007204F
	Return Header Cast Iron	012330F	012330F	012330F
4-H	Studbolt	009104F	009104F	009104F
5-H	Header Gasket (20 PCS)	007343F	007343F	007343F
6-H	Drain Valve	006536F	006536F	006536F
7-H	Air Vent Valve	011866F	011866F	011866F
8-H	Air Vent Waste Connector Adapter	013071F	013071F	013071F
HS	**HEAT EXCHANGER (Condensing)**			
1-HC	Heat Exch Stainless Steel (Includes 21-S)	012586F	012587F	012588F
2-HC	Condensate Float Switch	012589F	012589F	012589F
3-HC	O Ring Seal	012590F	012590F	012590F
M	**MISCELLANEOUS COMPONENTS**			
1-M	Flow Switch Paddle (Taco)	010026F	010026F	010026F
2-M	Window Combustion Chamber	006947F	006947F	006947F
3-M	T & P Gauge 0-90 PSI	007205F	007205F	007205F
	T & P Gauge 0-200 PSI	007399F	007399F	007399F
4-M	PRV 30 PSI	007748F	007748F	007748F
	PRV 45 PSI	007221F	007751F	007752F
	PRV 60 PSI	007222F	007753F	007754F
	PRV 75 PSI	007223F	007756F	007756F
	PRV 125 PSI	007224F	007224F	007758F
	PRV 150 PSI	007225F	007225F	007225F
21-M	UV PRV 150 PSI	013415F	013415F	013415F
5-M	RTV Sealant 2.8 oz (Not Shown)	008924F	008924F	008924F
	RTV Sealant 10 oz (Not Shown)	005755F	005755F	005755F
6-M	Flue Collector Vertical Seal Gasket	011772F	011772F	011772F
7-M	Insulation Blanket Return Header	007241F	007241F	007241F
8-M	Flue Exhaust Adapter Gasket Round	009735F	009736F	009736F
9-M	Flue Exhaust Adapter Gasket Rectangle	012591F	012592F	012592F
10-M	Plenum Gasket Upper and Lower	012593F	012593F	012594F
11-M	Access Panel Gasket Condensing Heat Exch	012595F	012595F	012595F
12-M	Flange Gasket 2" or 2-1/2" NPT	012596F	012596F	012596F
13-M	Condensate Hose	012597F	012597F	012597F
14-M	Condensate Neutralizer (Not Shown)	012664	012665	012665
15-M	Membrane Switch	012598F	012598F	012598F
16-M	Touch up Paint (Green) Not Shown	750125	750125	750125
	Touch up Paint (Dark Gray) Not Shown	750126	750126	750126
17-M	Inlet/Outlet Water Grommet 2-1/2" NPT	012663F	012663F	012663F
	PRV Discharge Grommet 1" Thru 1-1/4" NPT	010779F	010779F	010779F
18-M	Wire Harness	012652F	012652F	012652F
20-M	Plastic Handle	012681F	012681F	012681F

CALL OUT	DESCRIPTION	1005	1505	2005
O	**OPTIONS**			
1-O	Remote Sensor (LWCO)	007228F	007228F	007228F
2-O	Control PC Board (LWCO)	007157F	007157F	007157F
3-O	Test / Reset Switch (LWCO)	005641F	005641F	005641F
4-O	Silencer/Reset Switch (Alarm)	005641F	005641F	005641F
5-O	Alarm Bell 3"	005642F	005642F	005642F
	Alarm Bell 4"	005643F	005643F	005643F
6-O	Relay DPDT 24 VAC (Alarm)	011720F	011720F	011720F
7-O	Flue Exhaust Temp Limit 162°F	011868F	011868F	011868F
P	**PUMPS**			
1-P	Bypass Pump Bronze (Soft Water)	011845F	011845F	007351F
	Bypass Pump Bronze (Medium Water)	011845F	007348F	007351F
	Bypass Pump Bronze (Hard Water)	007348F	007351F	
	Bypass Pump CI	011846F	011846F	950648
2-P	Pump Flange Gasket	013423F	013423F	013423F
3-P	Dual Injector Pump Bronze	012600F	012600F	012600F
	Dual Injector Pump CI	012601F	012601F	012601F
4-P	Pump Flange Gasket	012667F	012667F	012667F
5-P	Pump Cartrige	951153F	951153F	951153F
6-P	Injector Pump Bronze (WH)		012668F	012668F
	Injector Pump Bronze (WHP)	012669F	012669F	012669F
7-P	Pump Flange Gasket	013423F	013423F	013423F
S	**SHEETMETAL**			
1-S	Jacket Top	012602F	012602F	012602F
2-S	Flue Collector Front (No Opening) (Includes 6-M)	011789F	011791F	011793F
3-S	Flue Collector Rear (Opening) (Includes 6-M and 9-M)	012603F	012604F	012605F
4-S	Heat Transfer Supports	012606F	012606F	012606F
5-S	Upper Cabinet Supports Front	012607F	012607F	012607F
6-S	Upper Cabinet Supports Rear	012608F	012608F	012608F
7-S	Upper Cabinet Supports Side	012609F	012609F	012609F
8-S	Vertical Cabinet Supports	012610F	012611F	012612F
9-S	Return Header Cover	007257F	007257F	007257F
10-S	Jacket Upper Front Panel	012613F	012613F	012614F
11-S	Jacket Lower Front Panel	012615F	012616F	012617F
12-S	Jacket Side Panel	012618F	012619F	012620F
13-S	Jacket Upper Rear Panel	012621F	012622F	012623F
14-S	Access Panel Intake Air	012671F	012671F	012671F
15-S	Jacket Lower Rear Panel	012624F	012625F	012626F
16-S	Access Panel Lower Rear	012672F	012674F	012674F
17-S	Base Assembly	012627F	012627F	012627F
18-S	Leg Bracket Primary Heat Exch (4 pcs per boiler)	007306F	007306F	007306F
19-S	Leg Bracket Condensing Heat Exch (2 pcs per boiler)	012628F	012629F	012630F
20-S	Base Reflector Panel	007307F	007307F	007307F
21-S	Flue Exhaust Adapter Assembly	012631F	012632F	012632F
39-S	Flue Exhaust Adapter Assembly PVC	013410F	013411F	013411F
22-S	Control Box Assy	012633F	012633F	012633F
23-S	Control Box Cover Panel w/Display	012634F	012634F	012634F
24-S	Control Box Cover Panel	012682F	012682F	012682F
25-S	Power Switch Mounting Panel	011872F	011872F	011872F
26-S	Blower/Pump Switch Mounting Panel	011873F	011873F	011873F
27-S	Controller Mounting Panel	011874F	011874F	011874F
28-S	CWR Control Mounting Panel	011978F	011978F	011978F
29-S	Control Box Blank Cover Long	012635F	012635F	012635F
30-S	Control Box Blank Cover Short	011870F	011870F	011870F
31-S	24V Wiring Panel	012636F	012636F	012636F
32-S	Intake Air Adapter (plenum to Duct)	N/A	N/A	011881F
33-S	Intake Air Collar	012675F	012676F	012676F
34-S	Access Panel Wiring Box	012651F	012651F	012651F
35-S	Access Panel Condensing Heat Exch	012638F	012638F	012638F
36-S	Plenum Upper Condensing Heat Exch	012639F	012640F	012641F
37-S	Plenum Lower Condensing Heat Exch	012642F	012643F	012644F
38-S	Filter Access Cover	012683F	012683F	012683F
40-S	Condensate Hose Bracket	013422F	013422F	013422F
V	**VENTING**			
1-V	Outdoor Stack	011894	011895	011895
2-V	Vent Cap Vertical for Indoor Units	010802	010803	010803
3-V	Vent Cap Horizontal Thru-the-Wall for Indoor Units	006644	006646	006646
4-V	Intake Air filter Box	012645F	012646F	012647F
5-V	Air Filter Media	012599F	012599F	012599F
6-V	Condensate Drip Pan	012678F	012678F	012678F
7-V	Vent Termination Adapter PVC	013346F	013347F	013347F

www.raypak.com